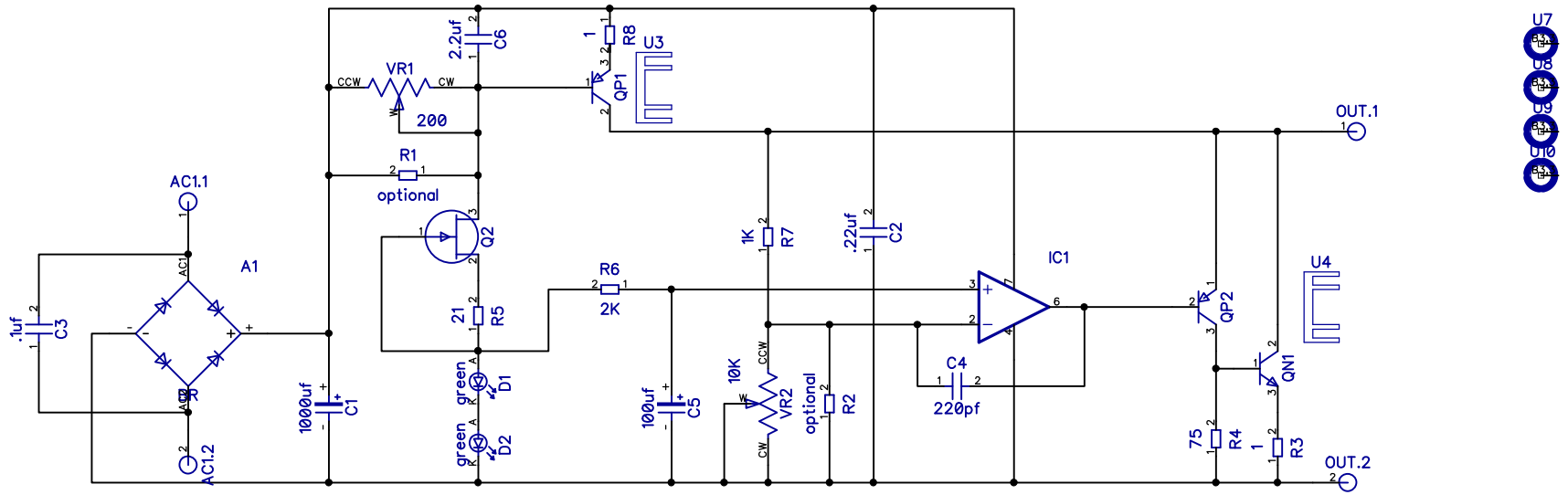

VRef as shown will be close to 4V

Vout = VRef * (1 + (RF / RG))

Where RF is R7 and RG is R2

Twisted Pear Audio	Placid Positive Shunt Regulated Power Supply			
	Russ White			
Copyright 2009	SIZE	FSCM NO.	DWG NO.	2.0.1
DIY Use Only	SCALE		Sheet 1	