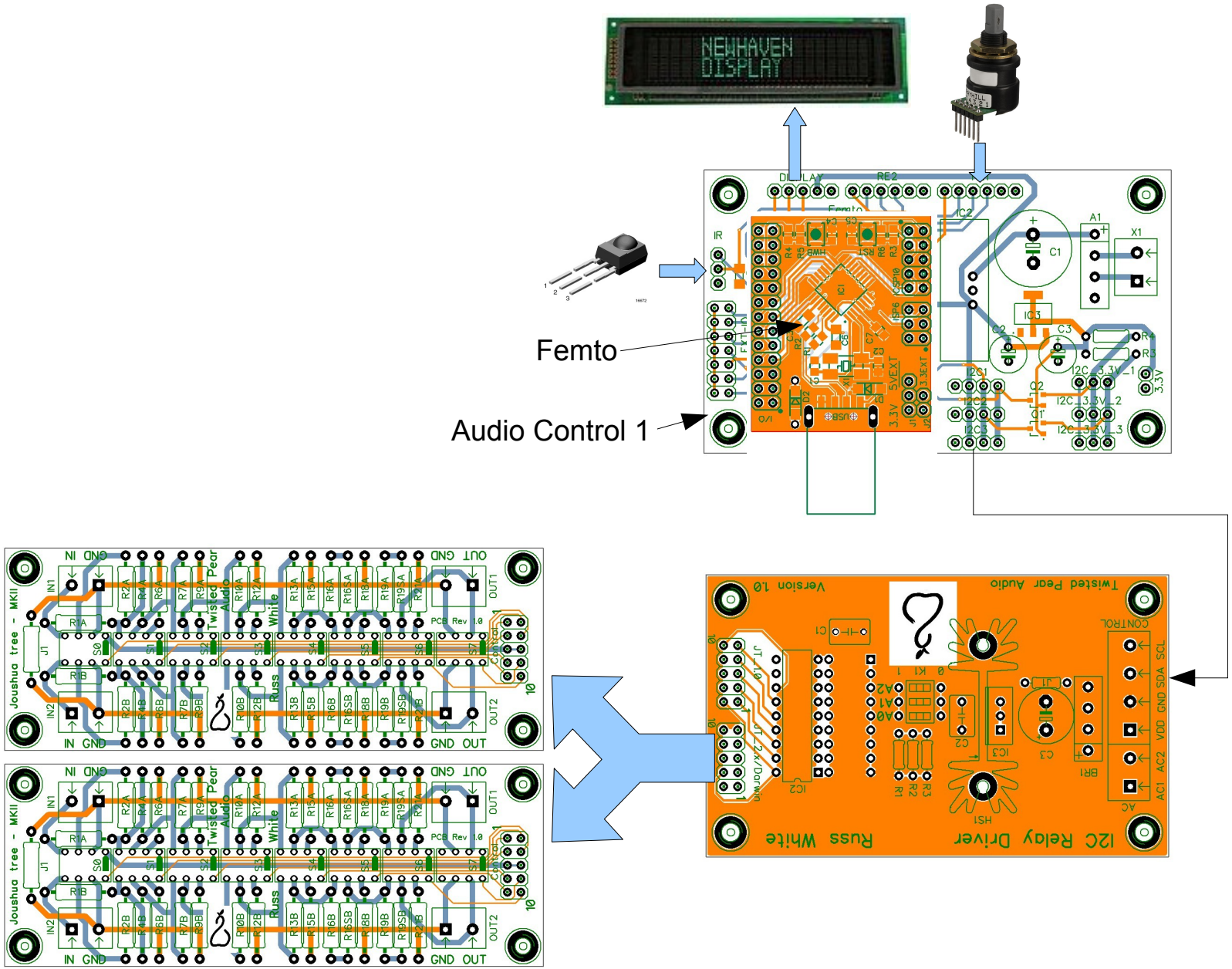
NEWHAVEN
DISPLAY
Femto
Audio Control 1
Joushua tree - MKII
Twisted Pear Audio
Russ White
I2C Relay Driver
Version 1.0
Twisted Pear Audio